Tuesday, April 13, 2004 08:00:16

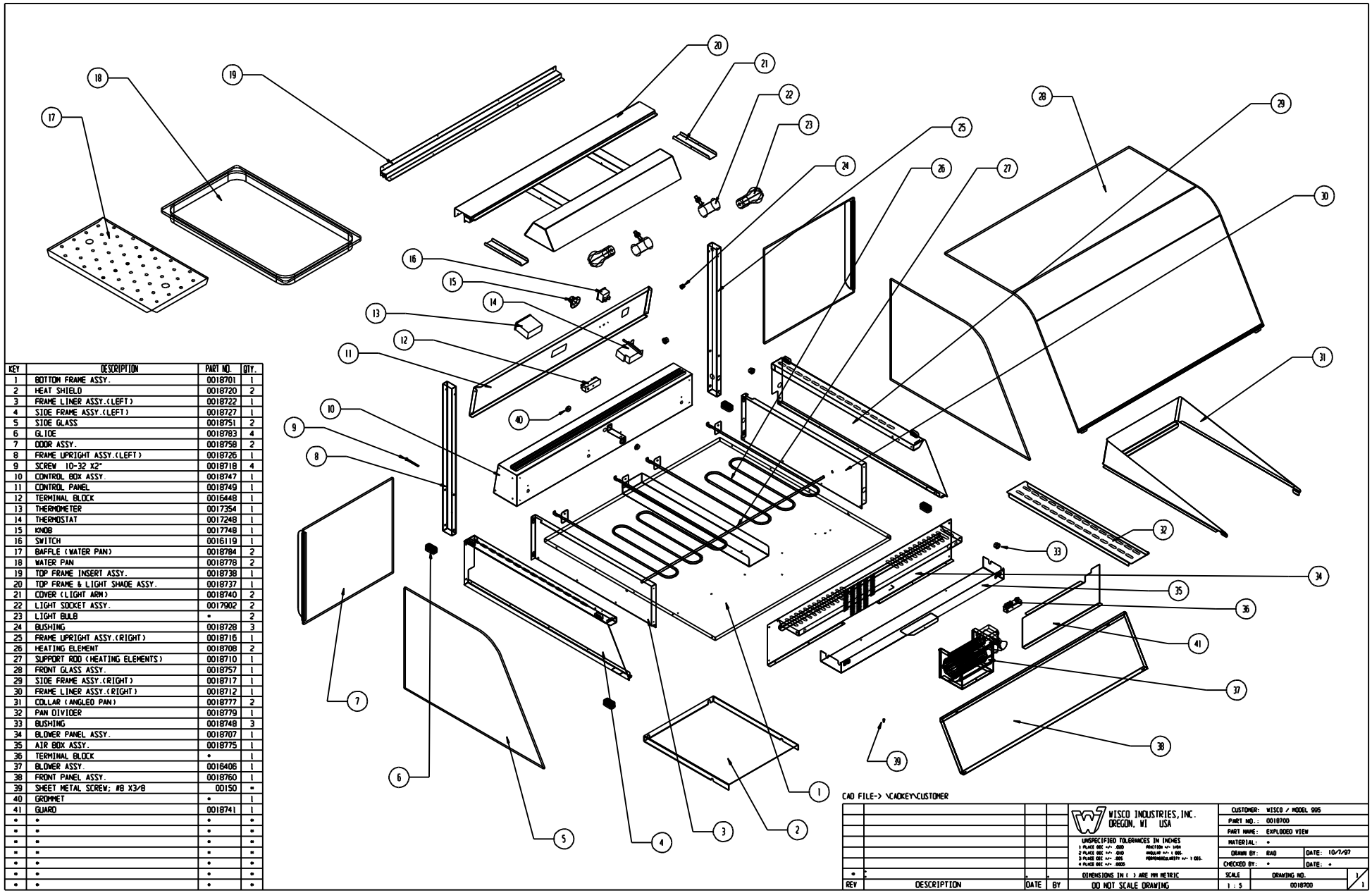


| KEY | DESCRIPTION | PART NO. | QTY. |
|---|---|---|---|
| 1 | BOTTOM FRAME ASSY. | 0018701 | 1 |
| 2 | HEAT SHIELD | 0018720 | 2 |
| 3 | FRAME LINER ASSY.(LEFT) | 0018722 | 1 |
| 4 | SIDE FRAME ASSY.(LEFT) | 0018727 | 1 |
| 5 | SIDE GLASS | 0018751 | 2 |
| 6 | GLIDE | 0018783 | 4 |
| 7 | DOOR ASSY. | 0018758 | 2 |
| 8 | FRAME UPRIGHT ASSY.(LEFT) | 0018726 | 1 |
| 9 | SCREW 10-32 X2" | 0018718 | 4 |
| 10 | CONTROL BOX ASSY. | 0018747 | 1 |
| 11 | CONTROL PANEL | 0018749 | 1 |
| 12 | TERMINAL BLOCK | 0016448 | 1 |
| 13 | THERMOMETER | 0017354 | 1 |
| 14 | THERMOSTAT | 0017248 | 1 |
| 15 | KNOB | 0017748 | 1 |
| 16 | SWITCH | 0016119 | 1 |
| 17 | BAFFLE (WATER PAN) | 0018784 | 2 |
| 18 | WATER PAN | 0018778 | 2 |
| 19 | TOP FRAME INSERT ASSY. | 0018738 | 1 |
| 20 | TOP FRAME & LIGHT SHADE ASSY. | 0018737 | 1 |
| 21 | COVER (LIGHT ARM) | 0018740 | 2 |
| 22 | LIGHT SOCKET ASSY. | 0017902 | 2 |
| 23 | LIGHT BULB | * | 2 |
| 24 | BUSHING | 0018728 | 3 |
| 25 | FRAME UPRIGHT ASSY.(RIGHT) | 0018716 | 1 |
| 26 | HEATING ELEMENT | 0018708 | 2 |
| 27 | SUPPORT ROD (HEATING ELEMENTS) | 0018710 | 1 |
| 28 | FRONT GLASS ASSY. | 0018757 | 1 |
| 29 | SIDE FRAME ASSY.(RIGHT) | 0018717 | 1 |
| 30 | FRAME LINER ASSY.(RIGHT) | 0018712 | 1 |
| 31 | COLLAR (ANGLED PAN) | 0018777 | 2 |
| 32 | PAN DIVIDER | 0018779 | 1 |
| 33 | BUSHING | 0018748 | 3 |
| 34 | BLOWER PANEL ASSY. | 0018707 | 1 |
| 35 | AIR BOX ASSY. | 0018775 | 1 |
| 36 | TERMINAL BLOCK | * | 1 |
| 37 | BLOWER ASSY. | 0016406 | 1 |
| 38 | FRONT PANEL ASSY. | 0018760 | 1 |
| 39 | SHEET METAL SCREW; #8 X3/8 | 00150 | * |
| 40 | GROMMET | * | 1 |
| 41 | GUARD | 0018741 | 1 |
| * | * | * | * |
| * | * | * | * |
| * | * | * | * |
| * | * | * | * |
| * | * | * | * |
| * | * | * | * |
| * | * | * | * |